Headrest System Diagram

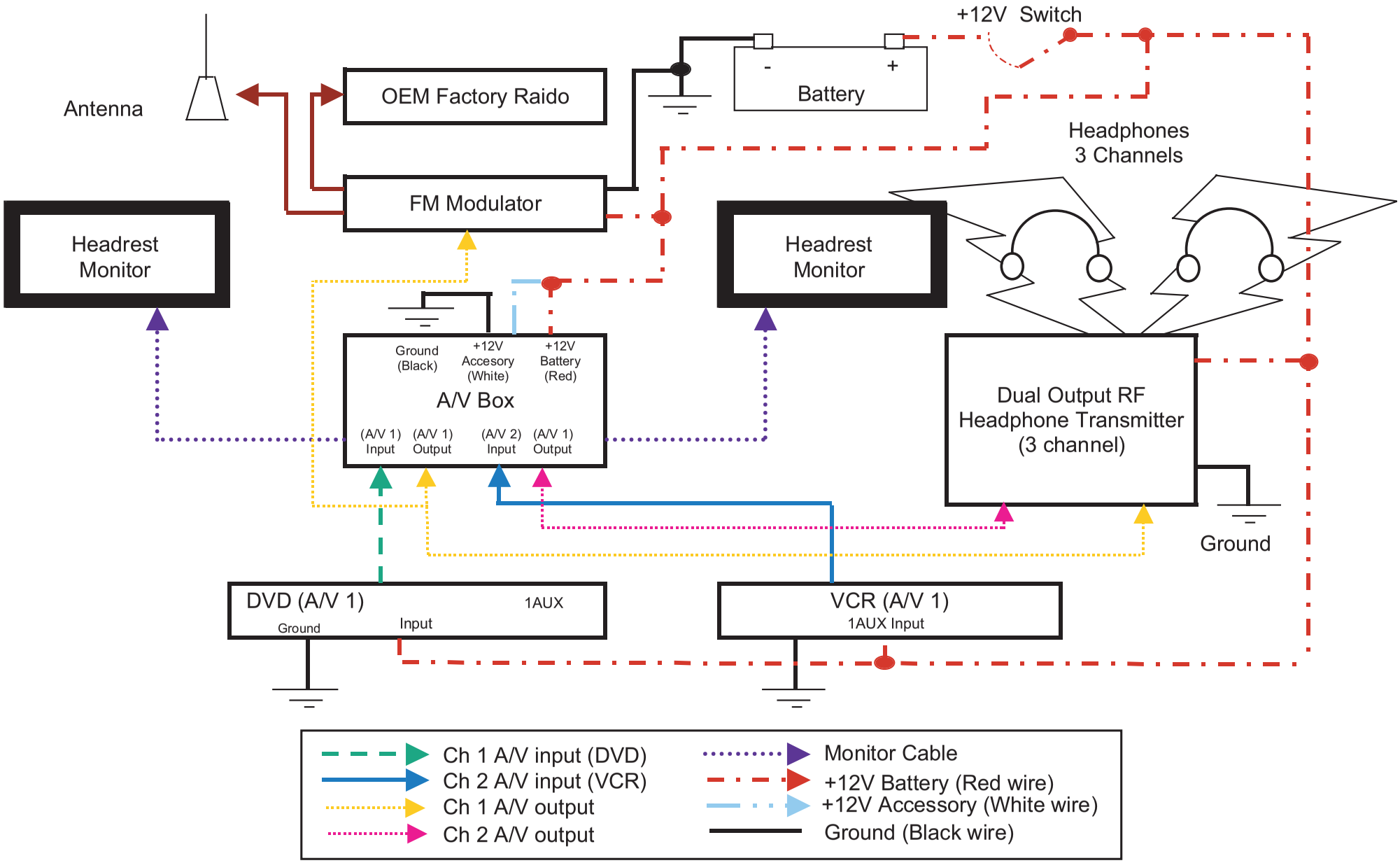
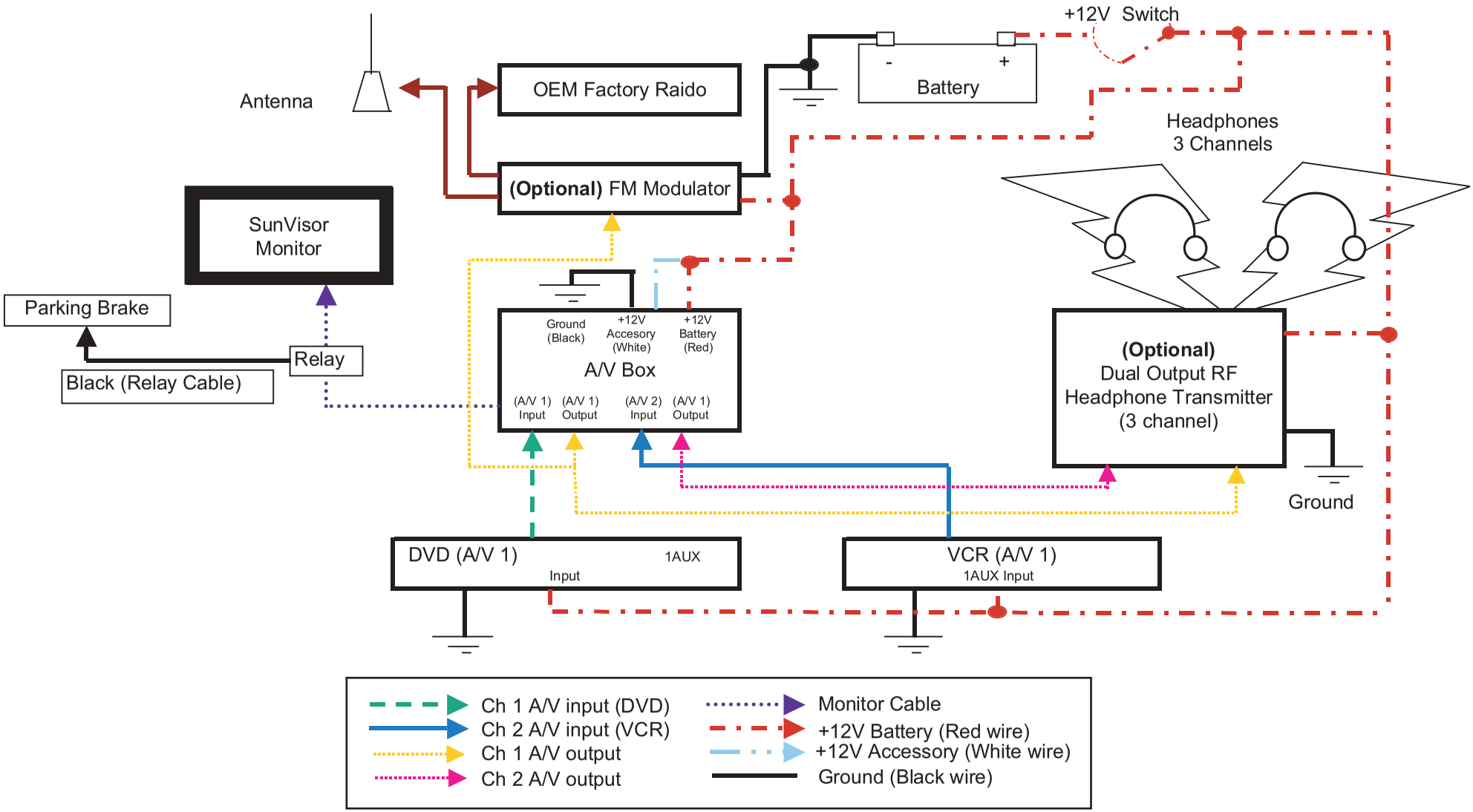
Visor System Diagram